Design of Cascode Current Sink for 100uA Reference Current

(For Supply Voltages 1.2V, 1.8V and 2.5V)

Group Number:- 15

Group Members:-

Arpit Raj (2023132)

Khushal Yadav (2022249)

Charu Singh (MT25111)

Sanskar Jain (2023486)

INDRAPRASTHA INSTITUTE *of* INFORMATION TECHNOLOGY **DELHI**

Project Objective and Tools used

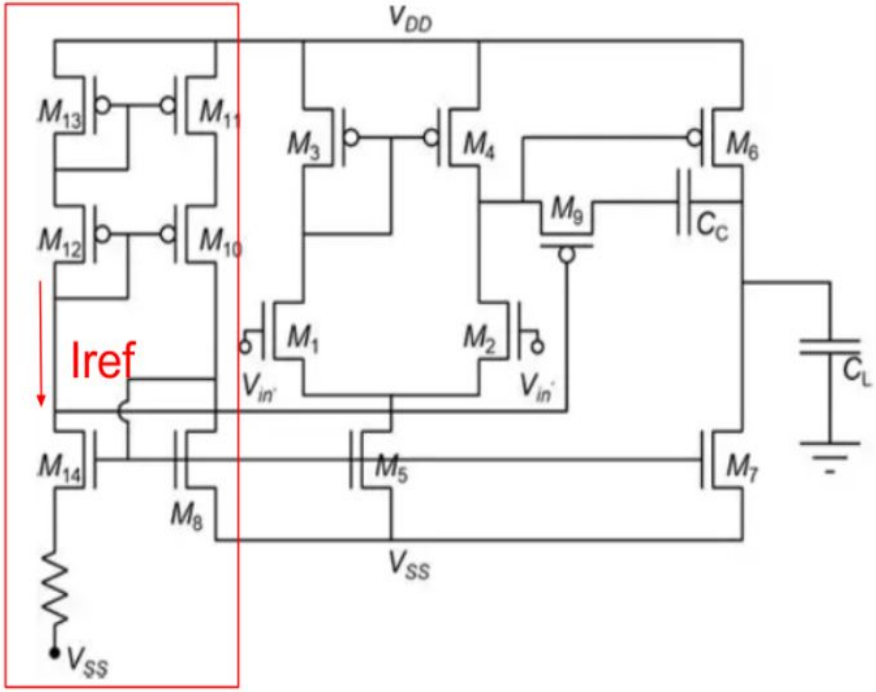

Objective:

To design a **CMOS Cascode Current Sink** generating a stable **reference current of 100 µA**, operating correctly across supply voltages of **1.2 V, 1.8 V, and 2.5 V**, to be used for biasing the 2nd stage of this circuit (for different group). Then report the Vmin and Rout of current sources.

Software used: Cadence Virtuoso (65 nm)
Simulation Tool used: ADE-L
Library: cmos65 and analogLib
Transistor Models: nsvt25, psvt25, nsvt18, psvt18, nlvtlp, plvtlp
Reference Corner: TT, 27 C

Design Approach

Starting Point:

Began with **theoretical estimation** using the saturation region equation: I(D) = ½ u Cox W/L (Vgs - Vth)^2
Assumed **Vov ≈ 0.2 V, unCox = 200uA/V2, upCox = 80uA/V2, Vt = 0.4V** for both NMOS and PMOS.
Initial guess: small W/L ratios → current too low, NMOS in subthreshold.

Refinement:

Step 1: Increased NMOS sizes → increased bias current but NMOS still weak (low VGS).
Step 2: Increased NMOS W to improve conduction → better but still not in Saturation.
Step 3: Decreased R to control reference branch current and bias voltages.
Step 4: Reduced M8 width to increase its VGS → achieved proper gate bias and 100 µA.
Verified all devices in **saturation (region = 2)** in ADE operating point.

Verification:

Observed **I(D) ≈ 100 µA** in all transistors.
Checked **VGS, VTH, VDS**, and **region** values and finalized all in Saturation.
Adjusted W/L and R iteratively to maintain **margin above VDS(sat)** for all transistors.

Schematic + Sizing (for 2.5 V)

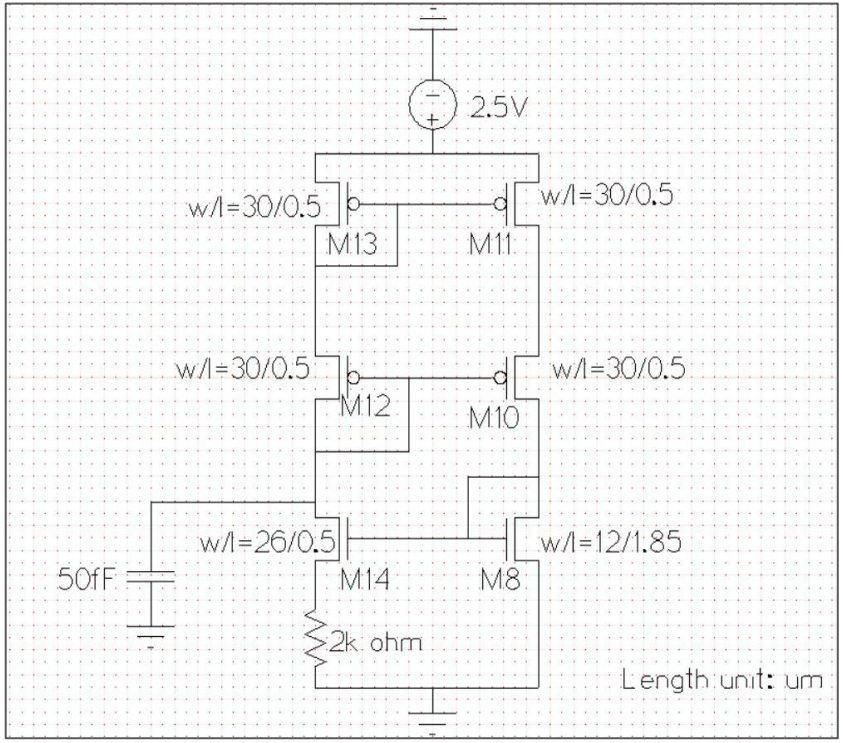

Transistor	Rout (ohm)	Region
M13	92.32 K	Saturation
M11	92.50 K	Saturation
M12	104.40 K	Saturation
M10	121.00 K	Saturation

Vout (min): 0.3059 V (at TT, 27C)
Resistor (R): 2 kΩ
Current: 100 μA (in both branches)
Devices: Verified in **Saturation** region.
Models used: nsvt25, psvt25

Output is taken on drain of M14, because that's the node which is going into gate of 2nd circuit.

Schematic + Sizing (for 1.8 V)

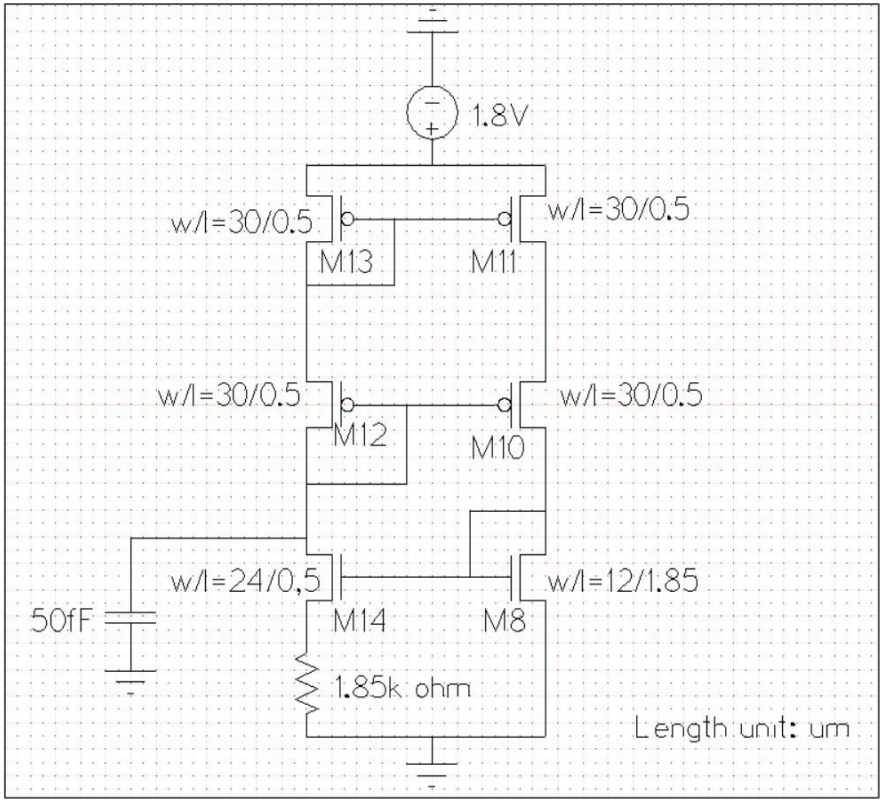

Transistor	Rout (ohm)	Region
M13	51.25 K	Saturation
M11	50 K	Saturation
M12	57.93 K	Saturation
M10	41.02 K	Saturation

Vout (min): 0.21 V (at TT, 27C)
Resistor (R): 1.85 kΩ
Supply (VDD): 1.8 V
Current: 100 μA (in both branches)
Devices: Verified in **Saturation** region.
Models used: nsvt18, psvt18

Schematic + Sizing (for 1.2 V)

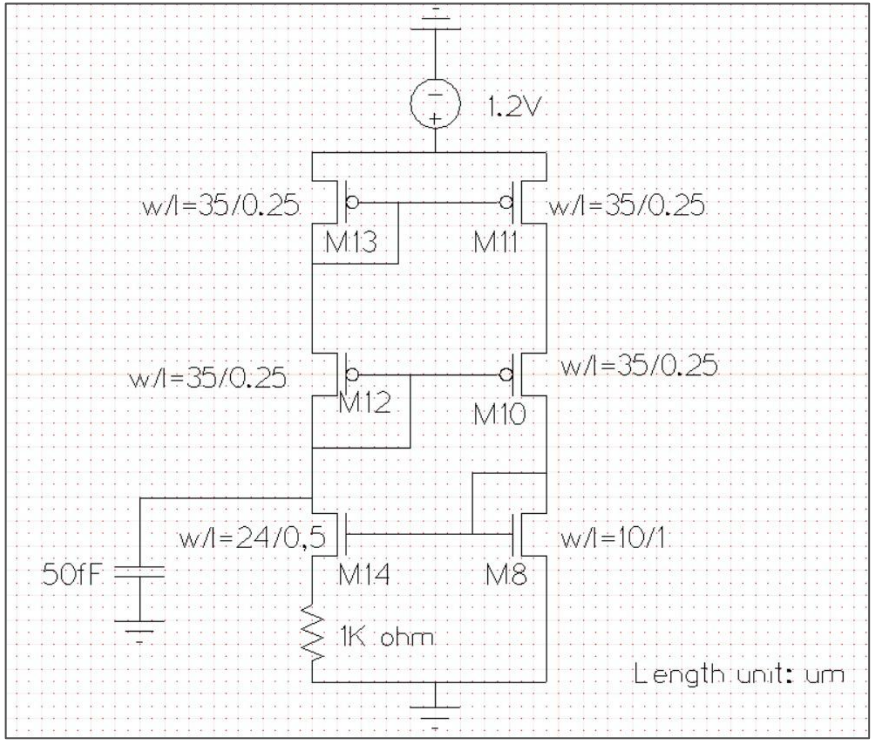

Transistor	Rout (ohm)	Region
M13	15.55 K	Saturation
M11	15.44 K	Saturation
M12	16.34 K	Saturation
M10	12.74 K	Saturation

Vout (min): 0.1487 V (at TT, 27C)
Resistor (R): 1 kΩ
Current: 100 μA (in both branches)
Devices: Verified in **Saturation** region.
Models used: nlvtlp, plvtlp

Had to use low Vt transistors because the supply voltage is very small to satisfy the stack voltages.

Sensitivity Analysis (w.r.t PVTs)

Sensitivity to Process = Change in Vout (min) as % deviation from TT, 25 C.

$$\%\Delta Vout = \frac{Vout_{corner} - Vout_{TT}}{Vout_{TT}} \times 100\%$$

For Supply = 2.5V

PVTs	I (ref)	Vth	Vout, min	% deviation
TT, 25 C	100.2 uA	0.580 V	0.3013 V	N/A
SS, 125 C	174.5 uA	0.561 V	0.5560 V	84.53 %
SS, 25 C	99.92 uA	0.606 V	0.3018 V	0.17 %
SS, -40 C	60.77 uA	0.687 V	0.1660 V	- 44.9 %
FF, 125 C	169.6 uA	0.503 V	0.5349 V	77.53 %
FF, -40 C	60.21 uA	0.5896 V	0.1604 V	- 46.76 %

Sensitivity Analysis (w.r.t PVTs)

For Supply = 1.8 V

PVTs	I (ref)	Vth	Vout, min	% deviation
TT, 25 C	100.1 uA	0.7502 V	0.2091 V	N/A
SS, 125 C	132.6 uA	0.7268 V	0.3037 V	45.24 %
SS, 25 C	100 uA	0.7752 V	0.2138 V	2.247 %
SS, -40 C	75.21 uA	0.8057 V	0.1548 V	- 25.97 %
FF, 125 C	139.9 uA	0.6756 V	0.2998 V	43.37 %
FF, -40 C	75.10 uA	0.7543 V	0.14835 V	- 29.053 %

Sensitivity Analysis (w.r.t PVTs)

For Supply = 1.2 V

PVTs	I (ref)	Vth	Vout, min	% deviation
TT, 25 C	100.4 uA	0.3364 V	0.1467 V	N/A
SS, 125 C	143.6 uA	0.3262 V	0.2446 V	66.70 %
SS, 25 C	97.46 uA	0.3586 V	0.14816 V	0.99 %
SS, -40 C	64.55 uA	0.3804 V	0.08615 V	- 41.27 %
FF, 125 C	158 uA	0.2821 V	0.2418 V	64.82 %
FF, -40 C	71.29 uA	0.3359 V	0.08669 V	- 40.906 %

The circuit shows **large PVT sensitivity**, mainly due to strong temperature-dependent shifts in Vth and current. High temperatures increase current and Vout, while low temperatures reduce them, causing deviations of **±40–80%**. Process corners add variation, but **temperature dominates** the overall spread.

Sensitivity Analysis (Local Mismatch in Vth)

$$S^{+} = \frac{V_{out}(+\Delta V_{th}) - V_{out}(0)}{\Delta V_{th}}$$

$$S^{-} = \frac{V_{out}(0) - V_{out}(-\Delta V_{th})}{\Delta V_{th}}$$

Mismatch effects are not always symmetric; therefore, sensitivity should be evaluated for positive and negative parameter deviations.

Here, we are fixing the PVT and changing Vth.

For Supply = 2.5 V

Mismatch in Transistors	Vout (normal)	Vout (-)	Vout (+)	Vth (-)	Vth (+)	S (-)	S (+)
M11	0.3013 V	0.1412 V	0.4845 V	0.5469 V	0.6165 V	4.836 V/V	5.019 V/V
M14	0.3013 V	0.246 V	0.3376 V	0.5574 V	0.5920 V	2.447 V/V	3.025 V/V

Sensitivity Analysis (Local Mismatch)

For Supply = 1.8 V

Mismatch in Transistors	Vout (normal)	Vout (-)	Vout (+)	Vth (-)	Vth (+)	S (-)	S (+)
M11	0.2091 V	0.08316 V	0.3282 V	0.7338 V	0.7631 V	7.679 V/V	9.232 V/V
M14	0.2091 V	0.1488 V	0.2425 V	0.7355 V	0.7575 V	4.102 V/V	4.575 V/V

For Supply = 1.2 V

Mismatch in Transistors	Vout (normal)	Vout (-)	Vout (+)	Vth (-)	Vth (+)	S (-)	S (+)
M11	0.1467 V	0.06547 V	0.2238 V	0.3314 V	0.3398 V	16.24 V/V	22.67 V/V
M14	0.1467 V	0.08226 V	0.1806 V	0.3303 V	0.3391 V	10.56 V/V	12.55 V/V

Plot for Sensitivity vs Supply Voltage

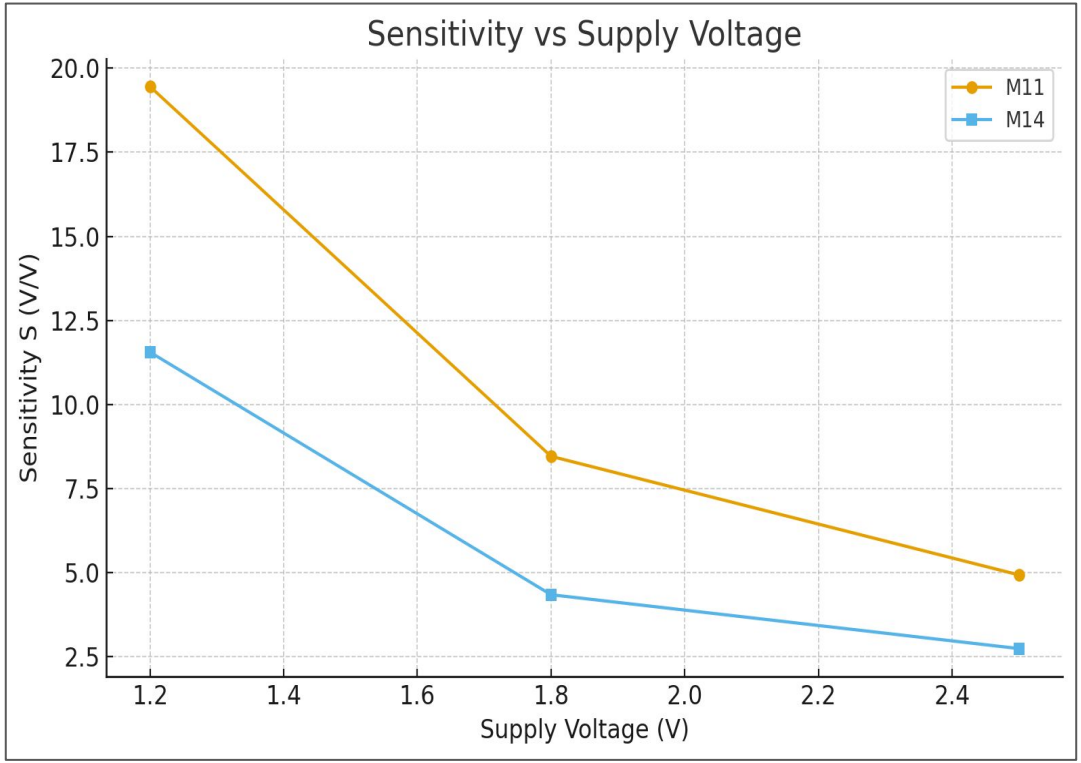

We performed a device-level mismatch test by manually increasing and decreasing Vth of critical devices (M11, M14).

The sensitivity values **S+ and S–** were extracted, and the results show:

- At **high supply (2.5 V)** → mismatch sensitivity is moderate (S ≈ 2–5 V/V)
- At **low supply (1.2 V)** → mismatch sensitivity is very high (S ≈ 10–24 V/V) because headroom is limited and small changes in Vth strongly affect current.

This confirms that **low-voltage current references are inherently more mismatch-sensitive.**

Conclusion

In this project, we designed a cascoded current sink that produces a stable **100 µA reference current** across supply voltages of **1.2 V, 1.8 V, and 2.5 V** using a 65 nm CMOS process. The design followed systematic transistor sizing, iterative bias tuning, and region checking to ensure that all devices operate in **saturation** under nominal TT, 25°C conditions.

PVT analysis showed large variation (±40–80%) mainly due to temperature-driven Vth shifts. Local mismatch sensitivity was moderate at high supply but became large at 1.2 V because of limited headroom. The design is functional but not a precision reference; variations reflect the inherent limitations of simple cascode current sinks in 65 nm.

THANK YOU !!!